Finite element modeling of the shake-table response of a bridge-like model comprising rocking columns

Conference Paper

Author(s):
Katsamakas, Antonios A.; Vassiliou, Michalis F.

Publication date:
2023-10

Permanent link:
https://doi.org/10.3929/ethz-b-000615846

Originally published in:
COMPDYN Proceedings, https://doi.org/10.7712/120123.10386.20737

Funding acknowledgement:
803908 - Seismic Testing of 3D Printed Miniature Masonry in a Geotechnical Centrifuge (EC)

COMPDYN 2023
9th ECCOMAS Thematic Conference on
Computational Methods in Structural Dynamics and Earthquake Engineering
M. Papadrakakis, M. Fragiadakis (eds.)
Athens, Greece, 12-14 June 2023

FINITE ELEMENT MODELING OF THE SHAKE-TABLE RESPONSE OF A BRIGDE-LIKE MODEL COMPRISING ROCKING COLUMNS

Antonios A. Katsamakas[1] **and Michalis F. Vassiliou**[2]

[1] Institute of Structural Engineering, ETH Zurich, Stefano-Franscini-Platz 5, CH-8097, Switzerland
e-mail: katsamakas@ibk.baug.ethz.ch

[2] Institute of Structural Engineering, ETH Zurich, Stefano-Franscini-Platz 5, CH-8097, Switzerland
e-mail: vassiliou@ibk.baug.ethz.ch

Abstract

This paper presents a three-dimensional finite element model to predict the shake-table response of a rocking bridge-like specimen. The numerical model is statistically validated against experimental results, which involved testing of the system under 169 three-directional ground motions. The model comprises four cylindrical rocking columns capped with a concrete slab. The columns are connected to the slab with flexible tendons and they are allowed to uplift and wobble. The use of flexible tendons allows for large displacements of the system and negative post-uplift stiffness. This mechanism acts as a form of seismic isolation, limiting the accelerations transmitted to the superstructure.

The rocking columns, the slab and the shake table are modeled using elastic elements. The tangential behavior of the contact surfaces is modeled with Coulomb friction, which is the main energy dissipation mechanism. The tendons are modeled with equivalent elastic springs. The numerical analysis accounts for the geometric non-linearity of the response.

Rocking motion is sensitive to the parameters that define it and experimental tests are often non-repeatable. Hence, this study employs a statistical approach to validate the proposed numerical model. The cumulative distribution function (CDF) of the response quantity of interest (e.g., maximum displacement at the center of the slab) is employed, instead of comparing the numerical and experimental results one-by-one for each test (deterministic comparison). The deterministic validation of the model shows a moderate correlation of the experimental and the numerical results. However, the model can accurately predict the statistical response for both parameters of interest (i.e., maximum displacement and maximum rotation) of the system under 169 ground motion excitations.

Keywords: Finite Element Modeling, Bridge Design, Rocking Bridge, Earthquake-Resistant Bridges, Statistical Model Validation, Seismic Isolation.

1 INTRODUCTION

Rocking structures are the ones that are allowed to uplift from their base when they are subjected to strong ground motion excitation (Figure 1). The rocking oscillator has been used to describe a wide range of structural systems, namely the out-of-plane behavior of masonry [1-10], the seismic response of monumental structures [11-15], and free-standing equipment [16-29]. Moreover, uplift works as a fuse, capping the accelerations transmitted to the structure. Hence, rocking can be used as a seismic design (seismic isolation) methodology, both for buildings [30-36] and bridges [37-56].

Recently, statistical methods based on "rocking spectra" or on the Incremental Dynamic Analysis (IDA) [57-60] were proposed for the design and analysis of rocking structures. Nevertheless, performing nonlinear time-history analyses remains the most widespread approach for the prediction of the rocking response. When performing such analyses, several issues emerge, such as the definition of parameters that are: i) merely numerical and have no physical meaning (e.g., time step), ii) related to the physical problem and are hard to measure (e.g., damping parameters). Moreover, both the experimental and the numerical models of rocking structures are very sensitive to the parameters that define them, and the shake table response of rocking structures is often non-repeatable. Hence, it is almost impossible to select a single "correct" test that can be used as a benchmark for the time-history analysis.

The seismic design problem is inherently stochastic since the design load (excitation) is stochastic. This means that one does not seek the response to an individual ground motion but a statistical measure of the response to a set of ground motions that define the seismic hazard. Following the early work of Yim, Chopra, and Penzien [61], the concept of statistical model validation was used by Bachmann et al. [62]: They tested a planar rocking structure under 600 ground motions and focused on the Cumulative Distribution Function (CDF) of the time maxima of each time history response. The CDF was both repeatable and predictable by the 1963 Housner model [63]. Vassiliou et al. [64] applied the same concept to a 3D rocking podium structure. The tests were repeatable and predictable, both with FEM [65] and with DEM [66]. Notably, the concept of statistical validation is also applicable to masonry [67], Reinforced Concrete (RC) [68-70], or seismically isolated structures [71].

This paper focuses on the 3D motion of a bridge model with rocking piers. The piers are connected to the top slab with flexible tendons. Initially, it describes the extensive shake-table testing of the bridge model under three-directional excitation, with the tests serving as the benchmark for the numerical model. Subsequently, it describes the proposed three-dimensional finite element model that was developed to capture the statistical response of the columns. Finally, it compares the experimental to the numerical results. The goal is to propose a statistically validated numerical model for the analysis of rocking bridges.

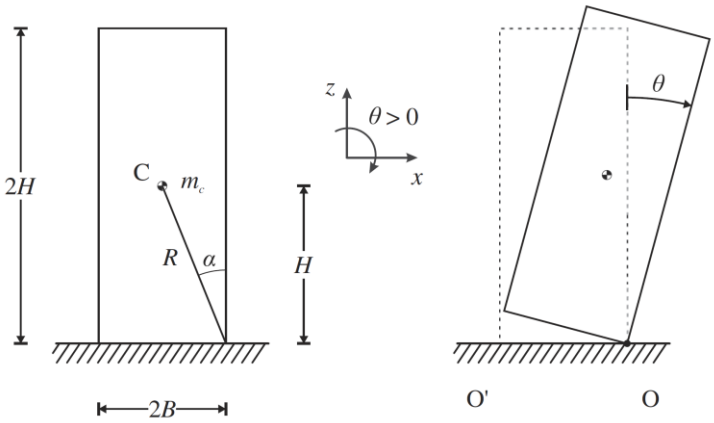

Figure 1: Schematic representation of a free-standing rocking body.

2 EXPERIMENTAL BENCHMARK DATASET

This section briefly describes the experimental tests performed in [72-73] that are used as a benchmark dataset for the validation of the proposed numerical model. The interested reader is referred to [72-73] for the detailed description of the shake-table tests and to [74] for the lateral cyclic tests of the same system. The specific dataset was selected since it fulfills the requirements of the statistical validation procedure, with a single specimen excited by multiple ground motions.

A rocking bridge model was constructed and tested in 1:5 scale (Figure 2). The model comprised four cylindrical free-standing RC columns with a diameter of 197 mm and a height of 1450 mm. The columns were capped with a RC slab with dimensions of 3150×3150×350 mm. An ungrouted steel tendon passed through a duct within the column. The bottom end of the tendon was anchored at the base of the column, whereas the top end was anchored at the top of the slab. The top end of the tendon was equipped with flexible Belleville (disc) springs (Figure 2) to reduce its axial stiffness. The axial stiffness of the tendon was 13,318 kN/m, whereas the axial stiffness of the whole tendon-spring system was 1,975 kN/m. The low axial stiffness of the tendon-spring system allowed for negative post-uplift stiffness of the bridge model. The displacement capacity of the restrained bridge model (equipped with tendons and springs) was equal to 394 mm, meaning two times higher than the displacement capacity of the unrestrained model (without tendons/springs). The shake table platen and the bottom face of the RC slab were equipped with steel plates and sliding restrainers (noted as "Column Top/Bottom Plate" in Figure 2) to restrain the columns from stepping out of their base.

The used ground motions were selected from all three categories of FEMA (far-field, near-field pulse-like, near-field non-pulse-like) and were scaled according to the geometric scaling of the model. A total of 181 shake-table tests were performed. A detailed description of the used ground motions appears in [72]. It is noted that the intensity of many of the ground motions exceeded the design spectra of Athens, Greece.

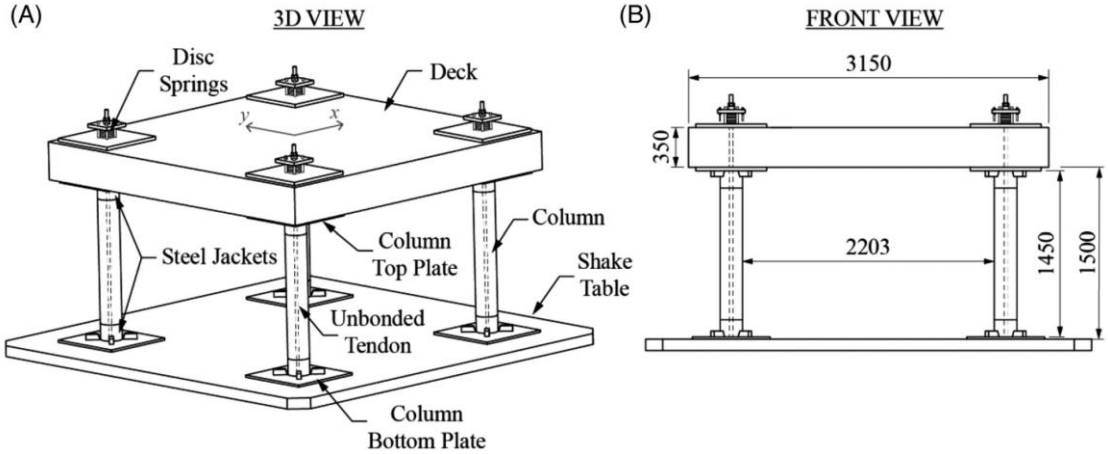

Figure 2: Schematic representation of the rocking bridge model. Figure adopted from [72].

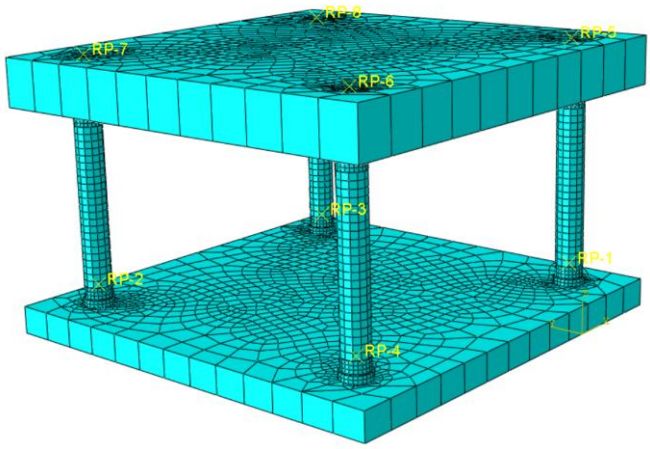

Figure 3: View of the numerical model developed in ABAQUS.

3 NUMERICAL MODEL

A three-dimensional finite element model was developed using ABAQUS software [75] (Figure 3). The objective of the numerical model was to statistically predict the experimental results using the Cumulative Distribution Function (CDF). Each experimental shake-table test corresponded to one nonlinear time-history analysis. All parts of the experimental setup, including the restrainers, were modeled in detail. The rocking columns, the RC slab, and the shake table platen were modeled using 8-node hexahedral (brick) elements with full integration and linear geometric order (C3D8 elements) [76-77]. The input motions were applied as motions of the shake table platen. All numerical analyses considered the geometrical nonlinearity since it is crucial in the rocking problem.

Each tendon-spring system (four in total) was modeled with an equivalent linear spring that connected the base of each column with the corresponding top point of the RC slab. The stiffness of this equivalent spring was 1,975 kN/m, as in the experimental campaign [72]. The spring had zero energy dissipation.

Contact interface elements were used to model contact between the following surfaces: i) the base of the columns and the shake-table platen, ii) the top of the columns and the RC slab, iii) the side of the columns and the top/bottom sliding restrainers. In all cases, a surface-to-

surface formulation was used. The lateral response of the contact elements was characterized by Coulomb friction with a friction coefficient of μ = 0.3 [29,78]. The definition of these elements is crucial as their friction constitutes the energy dissipation mechanism of the numerical model. Their normal behavior was characterized as "hard", allowing no penetration of the contact surfaces.

The Young's modulus of the RC and steel elements was 33 GPa and 200 GPa, respectively. Both materials were modeled as elastic since the developed stresses were well below the yielding point. The mesh of the columns close to the contact areas (top and bottom of the column) and at the main part of the column (mid-height) had a size of 30 mm and 50 mm, respectively (Figure 3). The main mesh of the RC slab had a size of 300 mm, whereas the vicinity of the contact area had a size of 30 mm (Figure 3). Finally, the shake table platen had a main mesh size of 250 mm, whereas, in the vicinity of the contact area, the mesh was 30 mm (Figure 3).

An implicit dissipative integration method (Hilber-Hughes-Taylor) was employed for the solution of the numerical model [79]. The time integration algorithm is defined by the integration time step (dt) and the alpha parameter (α_{HHT}). Since dt is variable, dt expresses the maximum allowed time step. The values of dt and α_{HHT} considered in the present study were dt= 10^{-3} sec and α_{HHT} = -0.2. This set of parameters and mesh size was proved to be accurate for simulating rocking members [29].

4 RESULTS

This section presents the predictions of the experimental results using the proposed model. Out of the 181 ground motions performed in [72], a total of 169 ground motions was selected for consideration in the present study. The 12 tests that were not considered were the ones where the displacement of the model exceeded the design limits, and external safety restrainers were engaged to control the motion of the model. Therefore, the objective of the proposed numerical model is to predict the behavior of the structure only when the restrainer was not engaged.

The scatter plot of Figure 4 compares the experimental and the numerical response in terms of maximum displacement at the center of the slab (u_{max}) and maximum rotation of the slab around its vertical axis (R_{max}). The correlation coefficients of the scatter plots (R) ranges between R = 0.74 for the maximum rotations and R = 0.79 for the maximum displacements, indicating a moderate-to-strong correlation. However, there are several cases where the numerical model over- or underestimates the experimental response.

Figure 5 compares the experimental to the numerical response for the two response quantities of interest, u_{max} and R_{max}, using the Cumulative Distribution Function (CDF). The CDF plots the different values of the response on the horizontal axis. On the vertical axis, it shows the probability that the response is going to be equal to, or smaller than, the value of the horizontal axis. The probability of collapse of the structure is equal to unity minus the final (top-right) point of the graph. Under the selected excitations, the probability of collapse is equal to zero (Figure 5). The statistical comparison shows that the numerical results match very well the experimental ones, with both CDF curves being almost identical.

The classical two-sample Kolmogorov-Smirnov (KS) p-value test is used to quantify the statistical accuracy of the numerical model [80-81]. In this test, two hypotheses, H_0 (which is tested) and its opposite H_1, are considered. The tested null hypothesis H_0 is rejected when the p-value of the KS hypothesis test is lower than a given statistical significance threshold α_s.

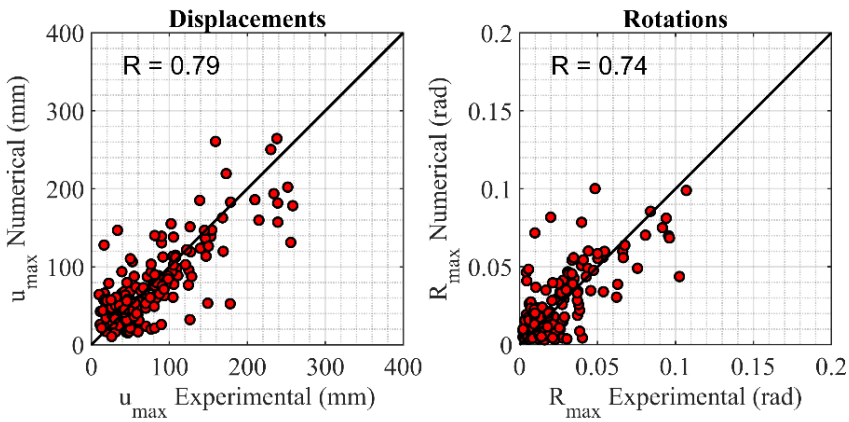

Figure 4: One-by-one comparison of the numerical and the experimental results. Left, maximum displacements of the RC slab; Right, maximum rotations of the RC slab

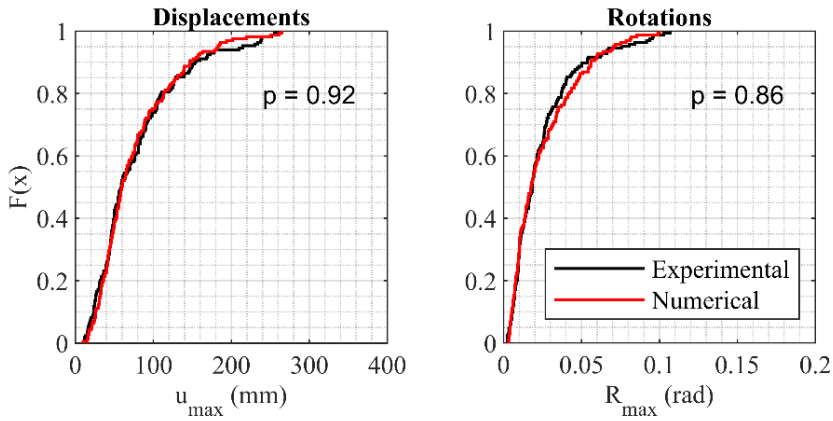

Figure 5: Statistical comparison of the numerical and the experimental results. Left, maximum displacements of the RC slab; Right, maximum rotations of the RC slab

A relatively large value of statistical significance is selected (α_s = 0.1). The p-value is the outcome of the KS test. A p-value higher than 0.1 shows that the two CDF curves originate from the same distribution. Noted in Figure 5, the p-values were p=0.92 and p=0.86 for u_{max} and R_{max}, respectively, with both values being well above the 0.1 limit (α_s). Hence, the numerical and the experimental CDFs indeed originate from the same distribution, further confirming the accuracy of the numerical model.

5 CONCLUSIONS

This study presents a three-dimensional finite element model to predict the response of a bridge model with free-standing rocking piers. Four cylindrical rocking RC columns supported a heavy RC slab. The columns were allowed to uplift and were restrained from sliding out of their initial position. The columns were connected to the slab with unbonded tendons. The tendons were fixed at the bottom of the columns and on top of the slab in series with flexible disc springs. The flexible tendon-spring system allowed for negative post-uplift stiffness of the system and large lateral displacements.

The proposed three-dimensional finite element model explicitly represented all parts of the bridge model, including the rocking columns, the steel tendons, and the restrainers. The pur-

pose of the numerical model was to accurately predict the statistical response of the experimental tests under 169 ground motions. The conclusions are summarized as follows:

- The one-by-one comparison of the experimental and the numerical results indicates a moderate-to-strong correlation, with the correlation coefficient being equal to R=0.79 and R=0.74 for the maximum displacements and the maximum rotations of the slab, respectively.
- The statistical comparison of the response under 169 ground motion excitations unveils that the numerical response is practically identical to the experimental. The p-value of the two-sample Kolmogorov-Smirnov test is equal to p=0.92 and p=0.86 for the maximum displacements and the maximum rotations of the slab, respectively. Since both p-values are well above the 0.1 limit, the two CDF curves originate from the same distribution, and the numerical model accurately matches the experimental response.

ACKNOWLEDGEMENTS

Financial support to the authors was provided by the European Research Council (ERC) under Starting Grant 803908. The methods, results, opinions, findings, and conclusions presented in this report are those of the authors and do not necessarily reflect the views of the funding agency.

REFERENCES

[1] M.J. DeJong, Seismic response of stone masonry spires: analytical modeling. *Eng Struct*, 40:556–565, 2012.

[2] S. Prajapati, G. Destro Bisol, O. AlShawa, L. Sorrentino. Nonlinear dynamic model of a two-bodies vertical spanning wall elastically restrained at the top. *Earthquake Engng Struct* Dyn.2022;51:2627–2647.https://doi.org/10.1002/eqe.3692

[3] O.A. Shawa, G. de Felice, A. Mauro, L. Sorrentino, Out-of-plane seismic behaviour of rocking masonry walls. *Earthq Eng Struct Dynam*, 41(5):949–968, 2012.

[4] M. Tondelli, K. Beyer, M. DeJong, Influence of boundary conditions on the out-of-plane response of brick masonry walls in buildings with RC slabs. *Earthq Eng Struct Dyn*, 45(8):1337–1356, 2016.

[5] D. Kalliontzis, A.E. Schultz, Characterizing the In-Plane Rocking Response of Masonry Walls with Unbonded Post-tensioning. *J Struct Eng*. 143(9), 04017110, 2017.

[6] N. Mendes, A.A. Costa, P.B. Lourenço et al, Methods and approaches for blind test predictions of out-of-plane behavior of masonry walls: a numerical comparative study. *Int J Arch Heritage*, 11(1):59–71, 2017.

[7] A. Mehrotra, M.J. DeJong, The influence of interface geometry, stiffness, and crushing on the dynamic response of masonry collapse mechanisms. *Earthq Eng Struct Dynam*, 47(13):2661–2681, 2018.

[8] D. Malomo, R. Pinho, A. Penna, Numerical modelling of the out-of-plane response of full-scale brick masonry prototypes subjected to incremental dynamic shake-table tests. *Engineering Structures*, *209*, 110298, 2020.

[9] D. Malomo, M.J. DeJong, A Macro-Distinct Element Model (M-DEM) for simulating in-plane/out-of-plane interaction and combined failure mechanisms of unreinforced masonry structures. *Earthquake Engineering & Structural Dynamics*, 51:793–811, 2022. https://doi.org/10.1002/eqe.3591

[10] F. Masi, I. Stefanou, V. Maffi-Berthier, Scaling laws for rigid-body response of masonry structures under blast loads. *Journal of Engineering Mechanics*, *147*(10), 04021078, 2021.

[11] D. Konstantinidis, N. Makris, Seismic response analysis of multidrum classical columns. *Earthquake Engng. Struct. Dyn*, 34: 1243-1270, 2005. https://doi.org/10.1002/eqe.478

[12] M.F. Vassiliou, N. Makris, Analysis of the rocking response of rigid blocks standing free on a seismically isolated base. Earthq Eng Struct Dyn, 41(2):177–196, 2012.

[13] V. Drosos, I. Anastasopoulos, Shaking table testing of multidrum columns and portals. *Earthq Eng Struct Dynam*, 43(11):1703–1723, 2014.

[14] V. Sarhosis, P. Asteris, T. Wang, W. Hu, Y. Han, On the stability of colonnade structural systems under static and dynamic loading conditions. *Bulletin of Earthquake Engineering*, *14*(4), 1131-1152, 2016.

[15] V. Sarhosis, D. Baraldi, J.V. Lemos, G. Milani, Dynamic behaviour of ancient free-standing multi-drum and monolithic columns subjected to horizontal and vertical excitations. *Soil Dynamics and Earthquake Engineering*, *120*, 39-57. 2019.

[16] D. Konstantinidis, N. Makris, Experimental and analytical studies on the response of free-standing laboratory equipment to earthquake shaking. *Earthquake Engng. Struct. Dyn*, 38: 827-848, 2009. https://doi.org/10.1002/eqe.871

[17] D. Konstantinidis, N. Makris, Experimental and analytical studies on the response of 1/4-scale models of free-standing laboratory equipment subjected to strong earthquake shaking. *Bull Earth Eng*. 8(6):1457–1477, 2010.

[18] C.E. Wittich, T.C. Hutchinson, Shake table tests of stiff, unattached, asymmetric structures. *Earthquake Engineering & Structural Dynamics*, *44*(14), 2425-2443, 2015.

[19] A. Dar, D. Konstantinidis, W.W. El-Dakhakhni, Evaluation of ASCE 43-05 seismic design criteria for rocking objects in nuclear facilities. *J. Struct. Eng.*, 142 (11), 04016110, 2016.

[20] A.I. Giouvanidis, E.G. Dimitrakopoulos, Nonsmooth dynamic analysis of sticking impacts in rocking structures. *Bull. Earthq. Eng.*, *15*(5), 2273-2304, 2017.

[21] C.E. Wittich, T.C. Hutchinson, Shake table tests of unattached, asymmetric, dual-body systems. *Earthquake Engineering & Structural Dynamics*, *46*(9), 1391-1410, 2017.

[22] L. Di Sarno, G. Magliulo, D. D'Angela, E. Cosenza, Experimental assessment of the seismic performance of hospital cabinets using shake table testing. *Earthquake Eng. Struct. Dyn.*, 48 (1), 103-123, 2019.

[23] Y. Bao, D. Konstantinidis, Dynamics of a sliding-rocking block considering impact with an adjacent wall. *Earthq Eng Struct Dynam*, 49(5):498–523, 2020.

[24] D. D'Angela, G. Magliulo, E. Cosenza. Seismic damage assessment of unanchored nonstructural components taking into account the building response. Structural Safety. 93, 102126, 2021. https://doi.org/10.1016/j.strusafe.2021.102126

[25] D. D'Angela, G. Magliulo, E. Cosenza. Towards a reliable seismic assessment of rocking components. 230, 111673. 2021. https://doi.org/10.1016/j.engstruct.2020.111673

[26] A.I. Giouvanidis, E.G. Dimitrakopoulos, P.B. Lourenço. Chattering: an overlooked peculiarity of rocking motion. Nonlinear Dynamics. 109, 459–477. 2022

[27] M. Kohrangi, K. Bakalis, G. Triantafyllou, D. Vamvatsikos, P. Bazzurro. Hazard consistent record selection procedures accounting for horizontal and vertical components of the ground motion: Application to liquid storage tanks. *Earthquake Engng Struct Dyn*. 2023;52:1232–1251.https://doi.org/10.1002/eqe.3813

[28] J. Wang, W. Chen, K. Dai, T. Li, S. Tesfamariam, Y. Lu. Seismic damage evaluation of unanchored nonstructural components under combined effects of horizontal and vertical near-fault ground motions. *Earthquake Engng Struct Dyn*. 2023;1-21.https://doi.org/10.1002/eqe.3846

[29] A.A. Katsamakas, M.F. Vassiliou, Finite element modeling of free-standing cylindrical columns under seismic excitation. *Earthquake Engng Struct Dyn*. 51:2016–2035, 2022. https://doi.org/10.1002/eqe.3651

[30] J.A. Bachmann, M.F. Vassiliou, B. Stojadinović, Dynamics of rocking podium structures. *Earthquake Engng Struct. Dyn*., 46: 2499– 2517, 2017. doi: 10.1002/eqe.2915.

[31] J.A. Bachmann, M.F. Vassiliou, B. Stojadinović, Rolling and rocking of rigid uplifting structures. *Earthquake Engng Struct Dyn*. 48: 1556– 1574, 2019. https://doi.org/10.1002/eqe.3213

[32] K.E. Bantilas, I.E. Kavvadias, L.K. Vasiliadis. Analytical investigation of the seismic response of elastic oscillators placed on the top of rocking storey. *Bull Earthquake Eng.* 19, 1249–1270 (2021). https://doi.org/10.1007/s10518-020-01019-3

[33] G. Ríos-García, A. Benavent-Climent, New rocking column with control of negative stiffness displacement range and its application to RC frames. *Eng. Struct.*, 206, 110133, 2020.

[34] K.E. Bantilas, I.E. Kavvadias, L.K. Vasiliadis, A. Elenas, Seismic fragility and intensity measure investigation for rocking podium structures under synthetic pulse - like excitations. *Earthquake Engineering & Structural Dynamics*, 50(13), 3441-3459, 2021.

[35] K.E. Bantilas, I.E. Kavvadias, L.K. Vasiliadis, Seismic response of elastic multidegree of freedom oscillators placed on the top of rocking storey. *Earthquake Engineering & Structural Dynamics*, 50(5), 1315-1333, 2021.

[36] C. Zhong, C. Christopoulos, Seismic response of slender MDOF structures with self-centering base shear and moment mechanisms. *Earthquake Engng Struct Dyn.* 1-20, 2023. https://doi.org/10.1002/eqe.3834

[37] N. Makris, M.F. Vassiliou, Planar rocking response and stability analysis of an array of free-standing columns capped with a freely supported rigid beam. *Earthquake Engng Struct. Dyn.*, 42: 431-449, 2013. https://doi.org/10.1002/eqe.2222

[38] Y. Shen, F. Freddi, L. Yongxing, L. Jianzhong. Enhanced Strategies for Seismic Resilient Posttensioned Reinforced Concrete Bridge Piers: Experimental Tests and Numerical Simulations. J. Struct. Eng., 2023, 149(3): 04022259

[39] E.G. Dimitrakopoulos, A.I. Giouvanidis, Seismic Response Analysis of the Planar Rocking Frame. *J. Eng. Mech.*, 141(7), 04015003, 2015.

[40] N. Makris, M.F. Vassiliou, Dynamics of the Rocking Frame with Vertical Restrainers. Journal of Structural Engineering. 2015. https://doi.org/10.1061/(ASCE)ST.1943-541X.0001231

[41] K. Zhang, J. Junfeng, L. Ning, j. Zhao, Y. Bai. Analytical model for evaluating lateral force capacity of precast concrete-filled steel tube column. *Engineering Structures.* https://doi.org/10.1016/j.engstruct.2022.115106

[42] A. Agalianos, A. Psychari, M.F. Vassiliou, B. Stojadinovic, I. Anastasopoulos, Comparative assessment of two rocking isolation techniques for a motorway overpass bridge. *Front Built Environ*. 3:47, 2017.

[43] A.I. Giouvanidis, E.G. Dimitrakopoulos, Seismic Performance of Rocking Frames with Flag-Shaped Hysteretic Behavior. *J. Eng. Mech*., 143(5), 04017008, 2017.

[44] M.F. Vassiliou, K.R. Mackie, Stojadinović B, A finite element model for seismic response analysis of deformable rocking frames. *Earthquake Eng Struct. Dyn*. 46: 447–466, 2017.

[45] Li S, Tsang H-Ho, Lam N. Seismic protection by rocking with superelastic tendon restraint. *Earthquake Engng Struct Dyn*. 2022; 51:1718–1737. https://doi.org/10.1002/eqe.3635

[46] M. F. Vassiliou, S. Burger, M. Egger, J. A. Bachmann, M. Broccardo, B. Stojadinovic, The three-dimensional behavior of inverted pendulum cylindrical structures during earthquakes. *Earthq. Eng. Struct. Dyn*., 46(14), 2261–2280, 2017.

[47] A. Dar, D. Konstantinidis, W. El-Dakhakhni, Seismic response of rocking frames with top support eccentricity. *Earthq. Eng. Struct. Dyn*., 47(12), 2496–2518, 2018.

[48] M. F. Vassiliou. Seismic response of a wobbling 3D frame. *Earthq. Eng. Struct. Dyn*., 47(5), 1212–1228, 2018.

[49] R. Thiers-Moggia, C. Málaga-Chuquitaype, Seismic protection of rocking structures with inerters. *Earthquake Engng Struct Dyn*. 48: 528– 547, 2019. https://doi.org/10.1002/eqe.3147

[50] Y. Xie, J. Zhang, R. DesRoches, J. E. Padgett. Seismic fragilities of single-column highway bridges with rocking column-footing. *Earthq. Eng. Struct. Dyn*., 48(7), 843–864, 2019.

[51] J. Zhang, Y. Xie, G. Wu, Seismic responses of bridges with rocking column - foundation: A dimensionless regression analysis. *Earthquake Engineering & Structural Dynamics*, 48(1), 152-170, 2019.

[52] A. I. Giouvanidis, Y. Dong. Seismic loss and resilience assessment of single-column rocking bridges. *Bull. Earthq. Eng*., 18, 4481-4513, 2020.

[53] M. Sieber, S. Klar, M. F. Vassiliou, I. Anastasopoulos. Robustness of simplified analysis methods for rocking structures on compliant soil. *Earthq. Eng. Struct. Dyn*., 49(14), 1388–1405, 2020.

[54] R. Thiers-Moggia, C. Málaga-Chuquitaype. Seismic control of flexible rocking structures using inerters. *Earthquake Engng Struct Dyn*. 49: 1519– 1538, 2020. https://doi.org/10.1002/eqe.3315

[55] I.M. Thomaidis, A.J. Kappos, A. Camara, Dynamics and seismic performance of rocking bridges accounting for the abutment - backfill contribution. *Earthquake Engineering & Structural Dynamics*, 49(12), 1161-1179, 2020.

[56] J. Yang, Z. Yang, Y. Chen, Y. Lv, N. Chouw. Finite element simulation of an upliftable rigid frame bridge under earthquakes: Experimental verification. *Soil Dynamics and Earthquake Engineering*. 2023. https://doi.org/10.1016/j.soildyn.2022.107716

[57] N. Reggiani Manzo, C.G. Lachanas, M.F. Vassiliou, D. Vamvatsikos, Uniform risk spectra for rocking structures, *Earthquake Engineering & Structural Dynamics.* 51:2610–2626, 2022. https://doi.org/10.1002/eqe.3691

[58] C.G. Lachanas, D. Vamvatsikos, Rocking incremental dynamic analysis. *Earthquake Engineering & Structural Dynamics*. 51:688–703, 2021.

[59] C.G. Lachanas, D. Vamvatsikos, E.G. Dimitrakopoulos. Intensity measures as interfacing variables versus response proxies: The case of rigid rocking blocks. *Earthquake Engng Struct Dyn*. 2023;1-18.https://doi.org/10.1002/eqe.3838

[60] C.G. Lachanas, D. Vamvatsikos, E.G. Dimitrakopoulos. Statistical property parameterization of simple rocking block response. Earthquake Engineering and Structural Dynamics. 2023;52:394-414. https://doi.org/10.1002/eqe.3765

[61] C.S. Yim, A.K. Chopra, J. Penzien, Rocking response of rigid blocks to earthquakes. *Earthquake Engng. Struct. Dyn.* 8: 565-587, 1980. https://doi.org/10.1002/eqe.4290080606

[62] J.A. Bachmann, M. Strand, M.F. Vassiliou, M. Broccardo, B. Stojadinović, Is rocking motion predictable? *Earthq Eng Struct Dynam*. 47(2):535–552, 2018.

[63] Housner GW. The behaviour of inverted pendulum structures during earthquakes. Bull Seismol Soc Am. 1963;53:404–417.

[64] M.F. Vassiliou, M. Broccardo, C. Cengiz, et al, Shake table testing of a rocking podium: Results of a blind prediction contest. *Earthquake Engng Struct Dyn.* 50: 1043– 1062, 2021. https://doi.org/10.1002/eqe.3386

[65] C. Zhong, C. Christopoulos, Finite element analysis of the seismic shake-table response of a rocking podium structure. *Earthquake Engng Struct Dyn.* 50: 1223– 1230, 2021. https://doi.org/10.1002/eqe.3397

[66] D. Malomo, A. Mehrotra, M.J. DeJong, Distinct element modeling of the dynamic response of a rocking podium tested on a shake table. *Earthquake Engng Struct Dyn*. 50: 1469– 1475, 2021. https://doi.org/10.1002/eqe.3404

[67] L. Del Giudice, M.F. Vassiliou, Mechanical properties of 3D printed material with binder jet technology and potential applications of additive manufacturing in seismic testing of structures. *Additive Manufacturing*, 36, 101714, 2020.

[68] L. Del Giudice, R. Wrobel, A.A. Katsamakas, C. Leinenbach, M.F. Vassiliou, Physical modelling of reinforced concrete at a 1:40 scale using additively manufactured reinforcement cages. *Earthquake Engng Struct Dyn.* 00 1– 15, 2021. https://doi.org/10.1002/eqe.3578

[69] L. Del Giudice, A.A. Katsamakas, M.F. Vassiliou, R. Wrobel, C. Leinenbach, Physical modelling of reinforced concrete structures using small-scale additively manufactured specimens: Results of cyclic tests. *3rd International Conference on Natural Hazards & Infrastructure (ICONHIC2022)*, Athens, Greece, July 5-7, 2022.

[70] L. Del Giudice, R. Wrobel, A.A. Katsamakas, C. Leinenbach, M.F. Vassiliou, Cyclic testing of 1: 40 scale cantilever RC elements with digitally manufactured reinforcement. *8th International Conference on Computational Methods in Structural Dynamics and Earthquake Engineering (COMPDYN 2021),* Athens, Greece, June 27-30, 2021

[71] A.A. Katsamakas, M.F. Vassiliou, Experimental parametric study and phenomenological modeling of a deformable rolling seismic isolator. *Journal of Earthquake Engineering*, 2023. (under review)

[72] N. Reggiani Manzo, M.F. Vassiliou, H. Mouzakis, E. Badogiannis, Shaking table tests of a resilient bridge system with precast reinforced concrete columns equipped with springs. *Earthquake Engineering & Structural Dynamics*, 51(1), 213-239, 2022.

[73] N. Reggiani Manzo, M.F. Vassiliou, H. Mouzakis, E. Badogiannis, L. Karapitta, Development of a Dataset from Shaking Table Tests of a Bridge System with Precast Reinforced Concrete Columns Equipped with Springs. *J. Struct. Eng.*, 2022, 148(11): 04722003, 2022.

[74] N. Reggiani Manzo, M.F. Vassiliou, Cyclic tests of a precast restrained rocking system for sustainable and resilient seismic design of bridges. *Engineering Structures*, 113620, 2021.

[75] ABAQUS Standard User's Manual. Providence, RI: Dassault Systèmes Simulia Corp; 2021

[76] A.A. Katsamakas, V.K. Papanikolaou, G.E. Thermou, K. Katakalos, Experimental and numerical investigation of the uniaxial compression behavior of SRG-Jacketed R/C columns. *Structures*, 44, 603–617, 2022. https://doi.org/10.1016/j.istruc.2022.07.089

[77] A.A. Katsamakas, V.K. Papanikolaou, G.E. Thermou, A FEM-based model to study the behavior of SRG-strengthened R/C beams. *Composite Structures*, 266, 113796, 2021. https://doi.org/10.1016/j.compstruct.2021.113796

[78] A.A. Katsamakas, M.F. Vassiliou, Finite element analysis of the dynamic response of a free-standing cylindrical column: A statistical approach. *3rd International Conference on Natural Hazards & Infrastructure (ICONHIC2022)*, Athens, Greece, July 5-7, 2022.

[79] H.M. Hilber, T.J. Hughes, R.L. Taylor, Improved numerical dissipation for time integration algorithms in structural dynamics. *Earthquake Engineering & Structural Dynamics.* 5(3):283–292, 1977.

[80] A. Kolmogorov, Sulla determinazione empirica di una lgge di distribuzione. Inst. Ital. Attuari, Giorn., 4, 83-91, 1933.

[81] N. Smirnoff, Sur les écarts de la courbe de distribution empirique. Matematicheskii Sbornik, 48(1), 3-26, 1939.