ETH zürich

ETH Library

The Hippocampal Place Cells and Fingerprints of Places

Spatial Representation Animals, Animats and Robots

Conference Paper

Author(s):
Tapus, Adriana; Battaglia, Francesco; Siegwart, Roland

Publication date:
2006

Permanent link:
https://doi.org/10.3929/ethz-a-010079249

Rights / license:
In Copyright - Non-Commercial Use Permitted

This page was generated automatically upon download from the ETH Zurich Research Collection.
For more information, please consult the Terms of use.

The Hippocampal Place Cells and Fingerprints of Places: Spatial Representation Animals, Animats and Robots

Adriana Tapus[a1], Francesco Battaglia[b] and Roland Siegwart[a]
a. Ecole Polytechnique Fédérale de Lausanne (EPFL), Autonomous Systems Lab, Switzerland
b. Collège de France, LPPA, France

Abstract. In this paper we address the problem of autonomous navigation seen from the neuroscience and the robotics point of view. A new topological mapping system is presented. It combines local features (i.e. visual and distance cues) in a unique structure – the "fingerprint of a place" - that results in a consistent, compact and distinctive representation. Overall, the results suggest that a process of fingerprint matching can efficiently determine the orientation, the location within the environment, and the construction of the map, and may play a role in the emerging of spatial representations in the hippocampus

1. Introduction

In all our daily behaviors, the space we are living and moving in plays a crucial role. Many neurophysiologists dedicate their work to understand how our brain can create internal representations of the physical space. Both neurobiologists and robotics specialists are interested in understanding the animal behavior and their capacity to learn and to use their knowledge of the spatial representation in order to navigate. The ability of many animals to localize themselves and to find their way back home is linked to their mapping system. Most navigation approaches require learning and consequently need to memorize information. Stored information can be organized as cognitive maps – term introduced for the first time in [31]. Tolman's model advocates that the animals (rats) don't learn space as a sequence of movements; instead the animal's spatial capabilities rest on the construction of maps, which represent the spatial relationships between features in the environment.

Several methods, each with its advantages and drawbacks, have been proposed to construct maps in the framework of autonomous robot navigation, from precise geometric maps based on raw data or lines to purely topological maps using symbolic descriptions. To mention only a few papers in the vast SLAM (Simultaneous Localization and Mapping) literature, Leonard and Durrant-Whyte introduced for the first time the concept of SLAM as the construction of maps while the robot moves

[1] Corresponding Author: Ecole Polytechnique Fédérale de Lausanne (EPFL), Autonomous Systems Lab, 1015 Lausanne, Switzerland ; E-mail : adriana.tapus@ieee.org

through the environment and the localization with respect to the partially built maps [15]. Many works in space representations are based on metric maps. The stochastic map technique to perform SLAM [3, 7, 15] and the occupancy grids approaches [28] are typical examples belonging to this kind of space representation. More recent vision-based metric approaches use SIFT features [24]. However, metric SLAM can become computationally very expensive for large environments. Thrun in [29] proposes probabilistic methods that make the metric mapping process faster and more robust. However, one of the main shortcomings of metric maps is that they are not easily extensible so as to be useable for higher level, symbolic reasoning. They contain no information about the objects and places within the environment.

Topological approaches to SLAM attempt to overcome the drawbacks of geometric methods by modeling space using graphs. Significant progress has been made since the seminal papers by Kuipers [13, 14]; Kortenkamp and Weymouth in [12] have also used cognitive maps for topological navigation. They defined the concept of gateways which mark the transition between two adjacent places in the environment. Their work has been an amelioration of Mataric's approach [17], contributing towards the reduction of the perceptual aliasing problem (i.e. observations at multiple locations are similar). They have used the data from sonars combined with vision information in order to achieve a rich sensory place-characterization. A model by Franz, Schölkopf and Mallot [8] was designed to explore open environments within a maze-like structure and to build graph-like representations. The model described in [5] represents the environment with the help of a Generalized Voronoi Graph (GVG) and localize the robot via a graph matching process. This approach has been extended to H-SLAM (i.e. Hierarchical SLAM) in [16], by combining the topological and feature-based mapping techniques. In [30], Tomatis et al. have conceived a hybrid representation, similar to the previously mentioned work, in which a global topological map with local metric maps associated to each node for precise navigation is described. Topological maps are less complex, permit more efficient planning than metric maps and they are easier to generate. Maintaining global consistency is also easier in topological maps compared to metric maps. However, topological maps suffer from perceptual aliasing (i.e. observations at multiple locations are similar) and the difficulty in automatically establish a minimal topology (nodes).

Our method uses fingerprints of places to create a cognitive model of the environment. The fingerprint approach, by combining the information from all sensors available to the robot, reduces perceptual aliasing and improves the distinctiveness of places. The main objective of this work is to enable the navigation of an autonomous mobile robot in structured environments without relying on maps a priori learned and without using artificial landmarks. A new method for incremental and automatic topological mapping and global localization [26] using fingerprints of places is described. The mapping method presented in this paper uses *fingerprints of places* to create a cognitive model of the environment. The construction of a topological mapping system is combined with the localization technique, both relying on *fingerprints of places*. This fingerprint-based approach yields a consistent and distinctive representation of the environment and is extensible in that it permits spatial cognition beyond just pure navigation.

2. Navigation Framework

Navigation strategies are based on two complementary sources of information (available on the mobile agent: animal, robot): idiothetic and allothetic. The idiothetic source yields internal information about the mobile agent movements (e.g. speed, acceleration) and the allothetic source provides external information about the environment (e.g. the cues coming from the visual, odor, laser range finders, sonars, etc.). Idiothetic information provides a metric estimate of the agent's motion, suffering from errors accumulation, which makes the position estimation unreliable at long-term. In contrast, the allothetic (sensory) data is stationary over the time, but is susceptible to perceptual aliasing (i.e. observations at multiple locations are similar) and requires non-trivial processing in order to extract spatial information.

The map-based navigation needs map-learning and localization. Map-learning is the process of constructing a map representing the environment explored by the mobile agent and localization is the phenomenon of finding the mobile agent's location (position) in the map. Localization and mapping are interdependent – to localize the robot, a map is necessary and to update a map the position of the mobile agent is needed. This is usually known as Simultaneous Localization and Mapping (SLAM) problem that is of a "chicken and egg" nature. While navigating in the environment, the mobile agent first creates and then updates the map.

3. Fingerprints of Places and Space Cognition

The seminal discovery of place cells, by O'Keefe and Dostrovsky [20], in the rat hippocampus – cells whose firing pattern is dependent on the location of the animal in the environment – led to the idea that the hippocampus works as a cognitive map of space [21]. It was shown in [4] (for a review see e.g. [23]) that the lesion of the hippocampus impairs the performance of rodents in a wide variety of spatial tasks indicating a role of the hippocampus in map-based navigation.

The framework for topological SLAM (Simultaneous Localization and Mapping) (see Figure 2) that we propose here organizes spatial maps in cognitive graphs, whose nodes correspond to fingerprints of places, and may be seen as a possible mechanism for the emergence of place cells. The computational model describes how a mobile agent can efficiently navigate in the environment, by using an internal spatial representation (similar to some extent to hippocampal place cells). This model builds a topological (qualitative) representation of the environment from the sequence of visited places. Many visual based systems for place fields based on metric information have been extensively discussed in literature (e.g. [10], [11] and [1] are just some of them).

In this work, places in the environment are characterized by *fingerprints of places*. This characterization of the environment is especially interesting when used within a topological framework. In this case the distinctiveness of the observed location plays an important role for reliable localization and consistent mapping. A fingerprint of a place is a circular list of features, where the ordering of the set matches the relative ordering of the features around the robot. We denote the fingerprint sequence using a list of characters, where each character is the instance of a specific feature defining the signature of a place. In this work, we choose to extract color patches and vertical edges from visual information and corners (i.e. extremity of line-segments) from laser scanner. The letter ′v′ is used to characterize an edge, the letters ′A′,′B′,′C′,...,′P′ to

represent hue bins and the letter ′c′ to characterize a corner feature (i.e. in this work, a corner feature is define as the extremity of a line-segment extracted with the Douglas-Peucker algorithm). An ′empty space′ between features is also denoted by the character ′n′ in the sequence, providing the angular distance between the features, which is some kind of very rough metric information. Figure 1 depicts how a fingerprint of a place is generated through an example. More details about the fingerprint approach can be found in [27].

With our fingerprint based-approach, the allothetic sensors are used (e.g. this choice has been made because similarly the animals are using multimodal sensory information). The fingerprints of places are integrating the information from the omnidirectional camera and the laser range finder, characterizing different places and being used to map (model) the environment. The relative angular position of the local features is also enclosed in the fingerprint of a place. A fingerprint of a place is associated to each distinctive place within the environment and so the result given by the fingerprint matching algorithm is strongly correlated to the location of the mobile agent in the environment, giving high or the highest probability to the correct place associated to the fingerprint. The firing of place cells units can be seen as the manifestation of fingerprint matching. The closer to the center of the place field the animal is, the higher the rate of neural firing.

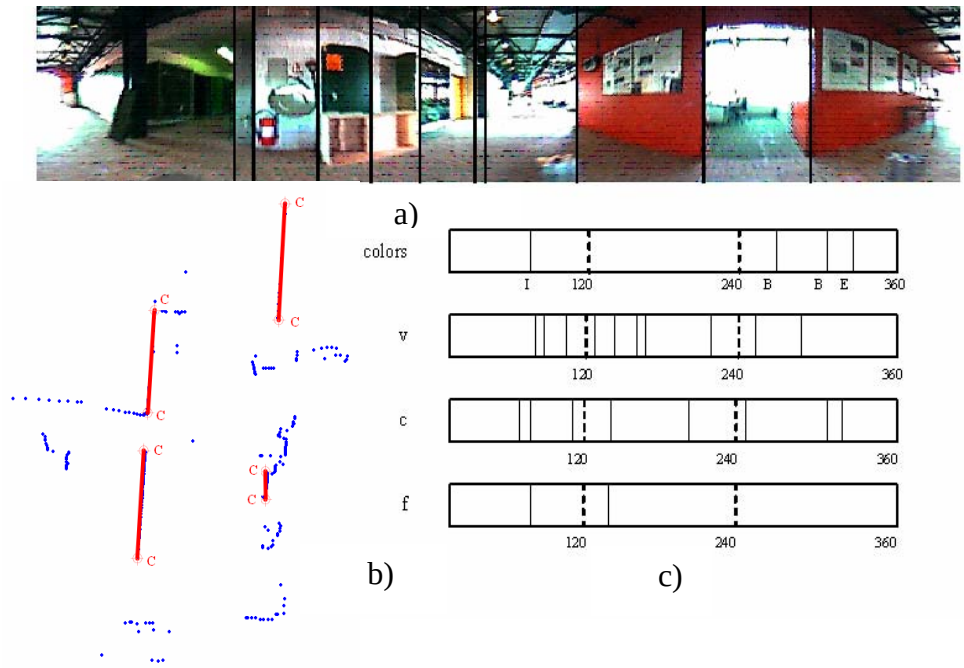

Figure 1: Fingerprint generation. (a) panoramic image with the vertical edges and color patches detected, denoted by ′v′ and ′A′…′P′, respectively ; (b) laser scan with extracted corners ′c′; (c) the first three images depict the position (0 to 360°) of the colors (I-light blue, B- orange and E-light green), vertical edges and corners, respectively. The forth image describes the correspondence between the vertical edge features and the corner features. By regrouping all these results together and by adding the empty space features, the final fingerprint is: cIfvnvcvfnvvncvnncvBnvBccE

Similarly, the nearer the new observation of the robot (i.e. the new observed fingerprint of a place) will be with respect to the registered (learned) place (i.e. a known fingerprint of a place), the higher the probability of the mobile agent of being in an already explored place.

One of the main issues in topological map building is to detect when a new node should be added in the map. Most of the existing approaches to topological mapping place nodes periodically in either space (displacement, Δd) or time (Δt) or alternatively attempt to detect important changes in the environment structure. Any of these methods cannot result in an optimal topology. In contrast, our approach is based directly on the differences in the perceived features. Instead of adding a new node in the map by following some fixed rules (e.g. distance, topology) that limit the approach to indoor or outdoor environments, our method introduces a new node into the map whenever an important change in the environment occurs. This is possible using the fingerprints of places. A heuristic is applied to compare whether a new location is similar to the last one that has been mapped.

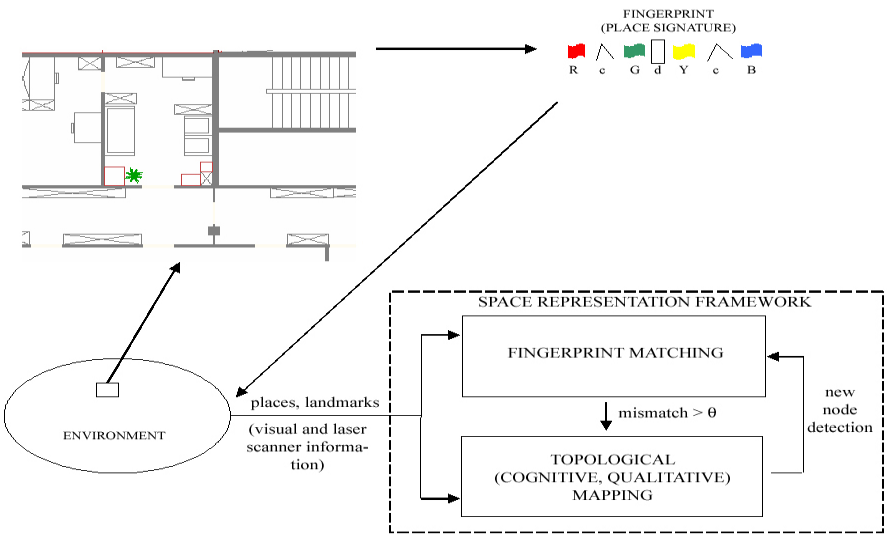

Figure 2: The spatial representation framework encodes the topological relationships between places, by comparing the actual observation (fingerprint of a place) of the mobile agent with the previously mapped places.

The process of introducing a new node in the topological map is split into several sequences of steps as follows:

1) Start with an initial node (i.e. fingerprint f_0)
2) Move and at each Δt (time) or Δd (distance), take a new scan with the laser scanner and a new image with the omnidirectional camera and generate the new fingerprint f_i
3) Calculate the probability of matching, *prob_matching*, between the fingerprints f_{i-1} and f_i respectively. Compute the dissimilarity factor, *dissimilarity*.

$$prob_matching = P(f_i \mid f_{i-1})$$

$dissimilarity(f_i, f_{i-1}) = 1 - prob_matching$

4) If $dissimilarity(f_i, f_{i-1}) < \theta$ then
   a. Add fingerprint f_i to the current node n_k
   b. Calculate the new mean fingerprint of the node n_k

   Else
   a. A new node n_{k+1} is inserted (added) in the map
   b. Add fingerprint f_i to the node n_{k+1}

5) Repeat from step 2)

In step 4), we defined a threshold θ as the maximum allowable dissimilarity (i.e. 1- *prob_matching*) between the fingerprints of places. The value of *prob_matching* is calculated with the "global alignment with uncertainty" algorithm [26]. This method is an extension of the global alignment algorithm (usually used for comparing D.N.A. sequences, introduced by Needleman and Wunsch [18]) that also includes the uncertainty of features. The value of the threshold is determined experimentally. The incremental nature of the approach permits incremental additions to the map and yields the most up-to-date map at any time. The basic process is depicted in Figure 3. A node is composed of several similar fingerprints that will be regrouped at the end in a mean fingerprint. By choosing a suitable threshold θ, the mean fingerprint enables clustering of places in nodes. In this way, the mean fingerprints are analogous with the hippocampal place fields. As soon as a new fingerprint is added to the current node n_k the mean fingerprint is updated by constructing the new mean fingerprint between the previous mean fingerprint and the new introduced fingerprint. With the mean-fingerprint, a unique identifier (i.e. a fingerprint of a place) for each node is computed enabling the construction of a very distinctive and compact representation of the environment.

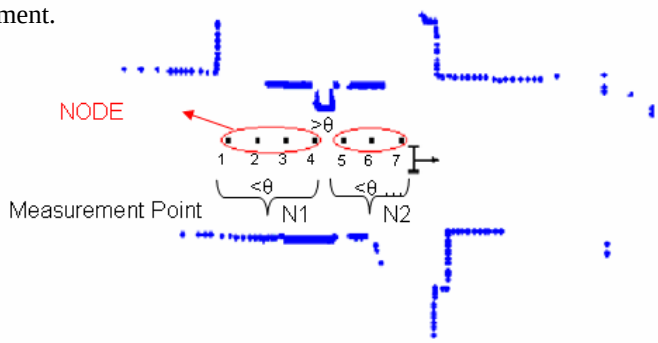

Figure 3: Adding a new node automatically to the topological map by moving in an unexplored environment. The image is composed of seven measurement points (i.e. fingerprints of places) represented by the black points. The blue points depict the data given by the laser range finder and they are used only for reference. The mapping system includes all the fingerprints of places in a node until a significant change in the environment occurs and the dissimilarity between the fingerprints is greater than the threshold θ.

Closing the loop problem (i.e. the identification of a place previously visited, if the robot returned to it) is an important problem in SLAM. Thus, for topological maps, this means that if a place (i.e. a node) has been visited before, and the robot returns to it, the robot should detect it. Contrary to other methods used for solving this problem, based usually on the perception, in our case, loops are identified and closed with the help of the localization technique using POMDP (Partially Observable Markov Decision Processes). In order to accomplish consistency of the topological map, a method similar

to the one described in [30] is used. Our method for closing the loops with fingerprints of places is detailed and fully described in [27].

Experiments were performed in a typically indoor environment (i.e. a portion of our institute building; see Figure 4). The resulting map is composed of 20 nodes. Each node is represented by a mean fingerprint which is a characterization of all the fingerprints composing the respective node. Nodes are automatically placed in locations where either a very salient landmark was present, or a door or another obstacle creates very different visual environments on its two sides (reflecting an intuitive notion of "place"). In fact, the doors of some rooms remained closed at the time of experimentation, and no node was placed in front of the respective rooms (see Figure 4). The representation obtained reproduces correctly the topological structure of the laboratory (see Figure 4). It is important to mention that the map is realized by using local features only, organized in fingerprints of places. The topological structure of the environment emerges in the map as a result of the computation, even though was not an input to the algorithm.

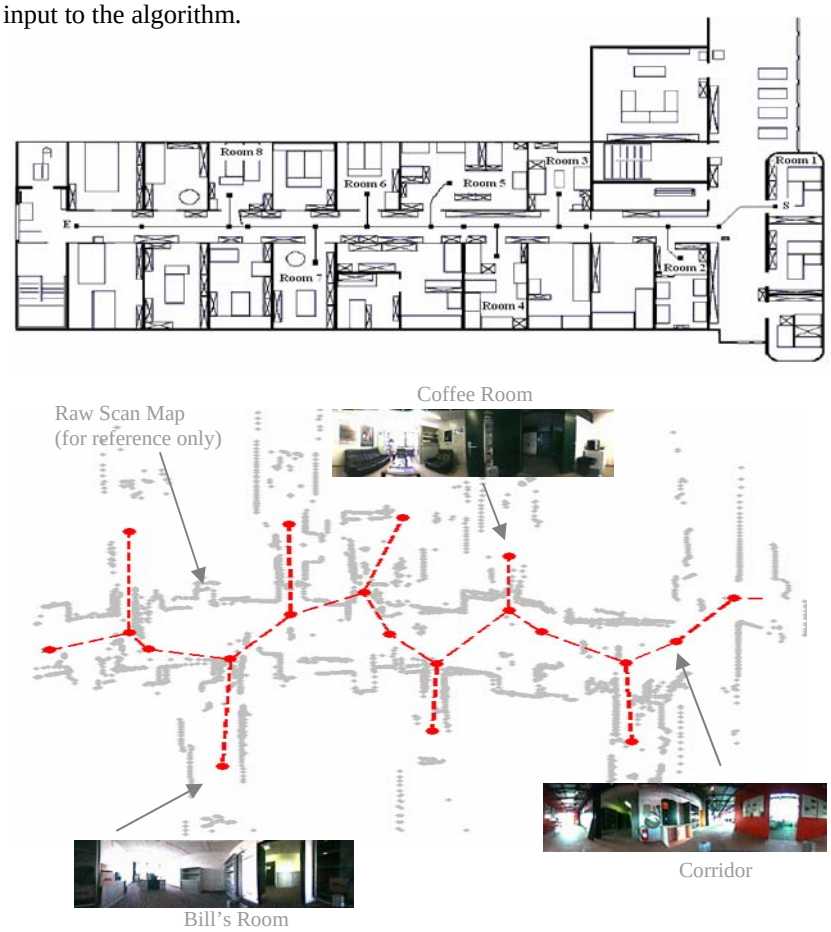

Figure 4: Floor plan of the environment where the experiments have been conducted. The robot starts at the point S and ends at the point E. The trajectory length is 75 m. During this experiment, the robot collected 500 data sets (i.e. images and scans) from the environment. The extracted topological map is superimposed on an architectural sketch of the environment. The second image shows the extracted topological map given by our method, superimposed on the raw scan map.

The quality of the topological maps obtained with our fingerprint-based technique can be easily estimated by testing the localization on it. To test the localization, more than 1000 fingerprint samples, acquired while the robot was traveling a new path of 250 m in the indoor environment shown above, were used to globally localize the robot. The results, obtained with the fingerprint matching algorithm (i.e. global alignment with uncertainty), have given a percentage of successful matches of 81%. However, false-classified nodes have delivered high probability (2nd or 3rd highest probability) and can be used with a POMDP (Partially Observable Markov Decision Processes). The POMDP localization improves the results obtained with the fingerprint matching approach. Adding the motion of the robot enables to decrease further the pose uncertainty to a level that could never be reached by fingerprint matching alone. A success rate of 100% was obtained for the tests performed in this work. More details about our indoor localization approach using POMDP and results can be found in [27]. The closing the loop problem has also been tested. The robot succeeded all the times to close the loops. As explained earlier, due to the fact that the offices are quite small, the fingerprints of places are very similar, and thus a single node per room is enough. Since a node contains a posterior knowledge about its environment and is the aggregation of all the fingerprints of places between the last node and the current place where an important change into the environment occurred, closing the loop problem does not appear in these cases (i.e. when one node per office is sufficient).

4. Hippocampal Place Cells as Fingerprints of Places?

The method presented here can efficiently create representations of places in an environment and locate the robot/animat in the environment. The place cells in the hippocampus accomplish the same task: the activation of a place cell, or perhaps better, of an assembly of place cells connected to each other, indicates that the hippocampus is locating the animal in a certain place. It can be suggested here that the hippocampus may indeed extract place from its sensory input by constructing fingerprints of places similar to that described in this work. Indeed, in environments rich in landmarks, or features, the hippocampal cognitive map is dominated by the sensory inputs (see e.g. [19], [9], [2]). Changing the relative position of landmarks can cause a complete change in place cells activity ("remapping") so that a new set of place cells gets an assigned to a given place, just as it would be the case for our fingerprint algorithm [6]. Many theoreticians have proposed models of place cells based on visual inputs, where the visual stream is encoded in metric terms, that is, in terms of the distances between the landmarks, and between each landmarks and the agent (e.g. [1], [10], [11]). Fingerprint representations are based on the relative angular position of the landmarks from a given point of view, a much simpler and robust measure, and may be able to explain many of the experimental evidences on place cells, at least those in which multiple landmarks were available to the animal. It is also to be remarked that some kind of metric information is contained in the fingerprint representation, through the "empty space" symbols in the fingerprint sequence, and that that information may allow the explanation of a larger class of experimental results.

For the brain to perform the fingerprint matching, several building blocks are necessary: first, the identification of the landmarks, which may take place for example in the inferotemporal cortex, second, the determination of the relative position of multiple landmarks, which probably takes place in the parietal lobe ([6], [22]). The

hippocampus may gather this information and produce a unitary representation (which would correspond to a fingerprint), presumably in terms of an attractor configuration of the CA3 module (which is very rich in recurrent synaptic connections and is thought to work as an attractor network module). At the moment of localization, the current input may be fed into the attractor dynamics, and, if the fingerprint matches one of the previously stored ones, the corresponding attractor is recalled. In the case of a failed match, the attractor dynamics will not produce an attractor state, and this fact may be use to signal a novel situation, and trigger the plasticity processes that allow the storage of a new memory.

This vision of hippocampal space representations highlights the role of the hippocampus as a processor of combinatorial information, whose importance transcends the purely spatial domain. In the case of space computation the hippocampus would process combinations of landmark identity and relative position information, and produce an index, which can be attached to a physical location. It is important to remark here that in our scheme the place representation does not entail any notion of Euclidean space, contrarily to what hypothesized in [21] and in a number of more recent works (see review in [23]).

In our view, the computation of place from sensory input (through a fingerprint-like procedure), could be integrated in the hippocampus by the idiothetic information, which plays an important role especially in conditions in which only poor sensory input is available (for example, in the dark), and to disambiguate situations of perceptual aliasing (see e.g. [25]).

5. Conclusions

Here, we tried to present our research framework, underlying the interest of mutual inspiration between robotics, biology and neurophysiology. Our computational model has some foundation in neurobiology, being similar with the hippocampus, which plays a crucial role in spatial representation. In order to validate our model experimentally, we have tested it with a real autonomous mobile robot. The mobile agent continuously interacted with the environment and thereby accumulated information about its space. Thus, an incremental and dynamic navigation framework was built, allowing the mobile agent to cope with unknown situations. The proposed spatial representation is an incrementally learned representation, based on fingerprints of places; the fingerprint place modeling being comparable with the place coding model in the animals (rats) hippocampus.

Acknowledgments

The authors would like to thank the BIBA IST-2001-32115 EU project, which is funding this research.

References

[1] Arleo A. and Gerstner W., Spatial Cognition and Neuro-Mimetic Navigation: A Model of Hippocampal Place Cell Activity, Biological Cybernetics, 83:287-299, 2000.

[2] Battaglia FP, Sutherland GR, McNaughton BL (2004) Local sensory cues and place cell directionality: additional evidence of prospective coding in the hippocampus. J Neurosci 24:4541-4550.

[3] Castellanos J.A., and Tardos J.D. (1999), Mobile Robot Localization and Map Building: Multisensor Fusion Approach, Kluwer.
[4] Cho, Y.H., Giese K.P., Tanila, H.T., Silva, A.J. and Eichenbaum, H. (1998), Abnormal hippocampal spatial representations in alphaCaMKIIT286A and CREBalphaDelta- mice, Science 279 (1998) 867-869.
[5] Choset, H., and Nagatani, K.(2001), Topological Simultaneous Localization and Mapping (SLAM): Toward Exact Localization Without Explicit Localization, IEEE Trans. On Robotics and Automation, Vol 17, No.2, April.
[6] Cressant, A., Muller, R.U. and Poucet B. (2002), Remapping of place cells firing patterns after maze rotations, Exp. Brain. Res. 143, 470-9
[7] Dissanayake, Newman, Clark, Durrant-Whyte and Csorba (2001), A Solution to the Simultaneous Localization and Map Building (SLAM) problem, IEEE Trans. On Robotics and Automation, Vol 17, No.3, June.
[8] Franz, M.O., Schölkopf, B., Mallot, H.A. and Bülthoff, Learning view graphs for robot navigation, Autonomous Robots 5 111-125, 1998.
[9] Gothard KM, Skaggs WE, Moore KM, McNaughton BL (1996b) Binding of hippocampal CA1 neural activity to multiple reference frames in a landmark-based navigation task. Journal of Neuroscience 16:823-835.
[10] Hartley T, Burgess N, Lever C, Cacucci F, O'Keefe J (2000) Modeling place fields in terms of the cortical inputs to the hippocampus. Hippocampus 10:369-379.
[11] Kali S, Dayan P (2000) The involvement of recurrent connections in area CA3 in establishing the properties of place fields: a model. J Neurosci 20:7463-7477.
[12] Kortenkamp, D. and Weymouth, T., Topological mapping for mobile robots using a combination of sonar and vision sensing, In Proceedings of AAAI-94, Seattle, WA, 1994.
[13] Kuipers, B. J., Modeling Spatial Knowledge, Cognitive Science, 2: 129-153, 1978.
[14] Kuipers, B. J., The Cognitive Map: Could it have been any other way?, In Spatial Orientation: Theory, Research and Application. Picks H.L. and Acredolo L.P. (eds.), New York. Plenum Press, 1983.
[15] Leonard J.J, H.F. Durrant-Whyte (1992), Directed Sonar Sensing for Mobile Robot Navigation, Kluwer Academic Publishers, Dordrecht.
[16] Lisien, B., et al. (2003), Hierarchical Simultaneous Localization and Mapping, In Proceedings of the IEEE/RSJ International Conference on Intelligent Robot and Systems, Las Vegas, USA, October 27-30.
[17] Mataric, M. J., Navigating with a rat brain: A neurobiologically-inspired model for robot spatial representation. In: J.A.Meyer, S.W.Wilson (Eds), From Animals to Animats, MIT Press, Cambridge, MA, 1991.
[18] Needleman, S.B., and Wunsch, C.D, A general method applicable to the search for similarities in the amino acid sequences of two proteins. Journal of Molecular Biology 48, 442-453, 1970.
[19] O'Keefe J, Burgess N (1996) Geometric determinants of the place fields of hippocampal neurons [see comments]. Nature 381:425-428.
[20] O'Keefe, J., and Dostrovsky, J., The hippocampus as a spatial map. Preliminary evidence from unit activity in the freely-moving rat. Brain Res. 34, 171-175, 1971.
[21] O'Keefe, J., and Nadel, L., The hippocampus as a cognitive map, Clarendon, Oxford, 1978.
[22] Poucet B, Lenck-Santini PP, Paz-Villagran V, Save E (2003) Place cells, neocortex and spatial navigation: a short review. J Physiol Paris 97:537-546.
[23] Redish AD (1999) Beyond the Cognitive Map: From Place Cells to Episodic Memory. Cambridge, MA: MIT Press.
[24] Se S., Lowe D. and Little, J. (2002), Mobile Robot Localization and Mapping with uncertainty using Scale-Invariant Visual Landmarks, The International Journal of Robotics Research, Vol. 21, No. 8, pp. 735-758.
[25] Skaggs WE, McNaughton BL (1998) Spatial firing properties of hippocampal CA1 populations in an environment containing two visually identical regions. Journal of Neuroscience 18:8455-8466.
[26] Tapus, A., Tomatis, N. and Siegwart, R., Topological Global Localization and Mapping with Fingerprint and Uncertainty. In Proceedings of the ISER, Singapore, June 2004.
[27] Tapus, A., Topological SLAM- Simultaneous Localization and Mapping with Fingerprints of Places. Ph.D Thesis, Ecole Polytechnique Federale de Lausanne, October 2005.
[28] Thrun, S. (1998), Learning metric-topological maps for indoor mobile robot navigation. In Artificial Intelligence 99(1):21-71.
[29] Thrun, S. (2000), Probabilistic algorithms in robotics. In Artificial Intelligence Magazine 21(4):93-109.
[30] Tomatis, N., I. Nourbakhsh, and R. Siegwart (2003). Hybrid simultaneous localization and map building: a natural integration of topological and metric. Robotics and Autonomous Systems, 44:3-14.
[31] Tolman, E. C., Cognitive maps in rats and men, Psychological Review, 55:189-208, 1948.